# 8. Engine Cooling System

**⚠WARNING** ***Accidental or remote starting can cause severe personal injury or death. Before removing a housing panel or access door, disconnect the negative (–) cable at the battery to prevent the engine from starting.***

The genset has a liquid-cooled engine with integral, belt-driven coolant pump (Figure 8-2). The radiator is mounted horizontally in the base of the genset. The system drain plug is on the radiator end tank. The coolant recovery tank is mounted on the underside of the top housing panel.

***Beginning Spec C***, refer to Figure 8-1 to reassemble the cooling system components.

***Prior to Spec C***, refer to Figure 8-2 to reassemble the cooling system components.

A centrifugal blower (fan) is bolted on a spacer to the top belt pulley on the engine. It pulls cooling air up through the radiator and across all of the components inside the housing. The warm air is discharged out the bottom opening in the right end of the base.

See Page 3-8 regarding periodic cooling system maintenance.

See Page 9-3 regarding the coolant temperature sender.

## THERMOSTAT AND PUMP

See Engine Workshop Manual 981-0525 for coolant thermostat and pump service. The fan must come off to remove the pump.

## RADIATOR

To remove the radiator:

1. Disconnect the negative (-) battery cable *from the battery* to prevent the genset from starting.
2. Let the genset cool down and then drain the cooling system (p. 3-8).

   **⚠WARNING** ***Hot coolant spray can cause severe burns. Let the engine cool before releasing the pressure cap or removing the drain cap.***

3. Remove the radiator access cover on the back of the base.
4. Disconnect the two radiator hoses and withdraw the radiator out the side opening in the base.

Installation of the radiator is the reverse of removal. Replace the foam sealing strips around the opening in the base if they are damaged so that air is drawn through the radiator and not around it. Tighten all screws according to specifications (p. 15-1).

## FAN (BLOWER)

To remove the fan:

1. Remove the top and end housing panels (p. 4-4).
2. Remove the fan scroll.
3. Remove the four fan hub bolts and withdraw the fan and spacer.

   **⚠CAUTION** ***The fan (blower wheel) is fragile. Do not brace against it when loosening or tightening the hub bolts.***

Installation is the reverse of removal. To prevent recirculation of air, replace the foam sealing strips around the opening of the inner bulkhead (baffle) if they are damaged. Tighten all screws according to specifications (p. 15-1).

## FAN BELT

### Belt Tension

Remove the top genset housing panel (p. 4-4). Adjust tension so that deflection is 8-10 mm (0.3-0.4 inch) midway between the alternator and pump pulleys when a force of 10 kg (22 pounds) is applied.

### Belt Replacement

Remove the fan and then install the new belt and adjust its tension.

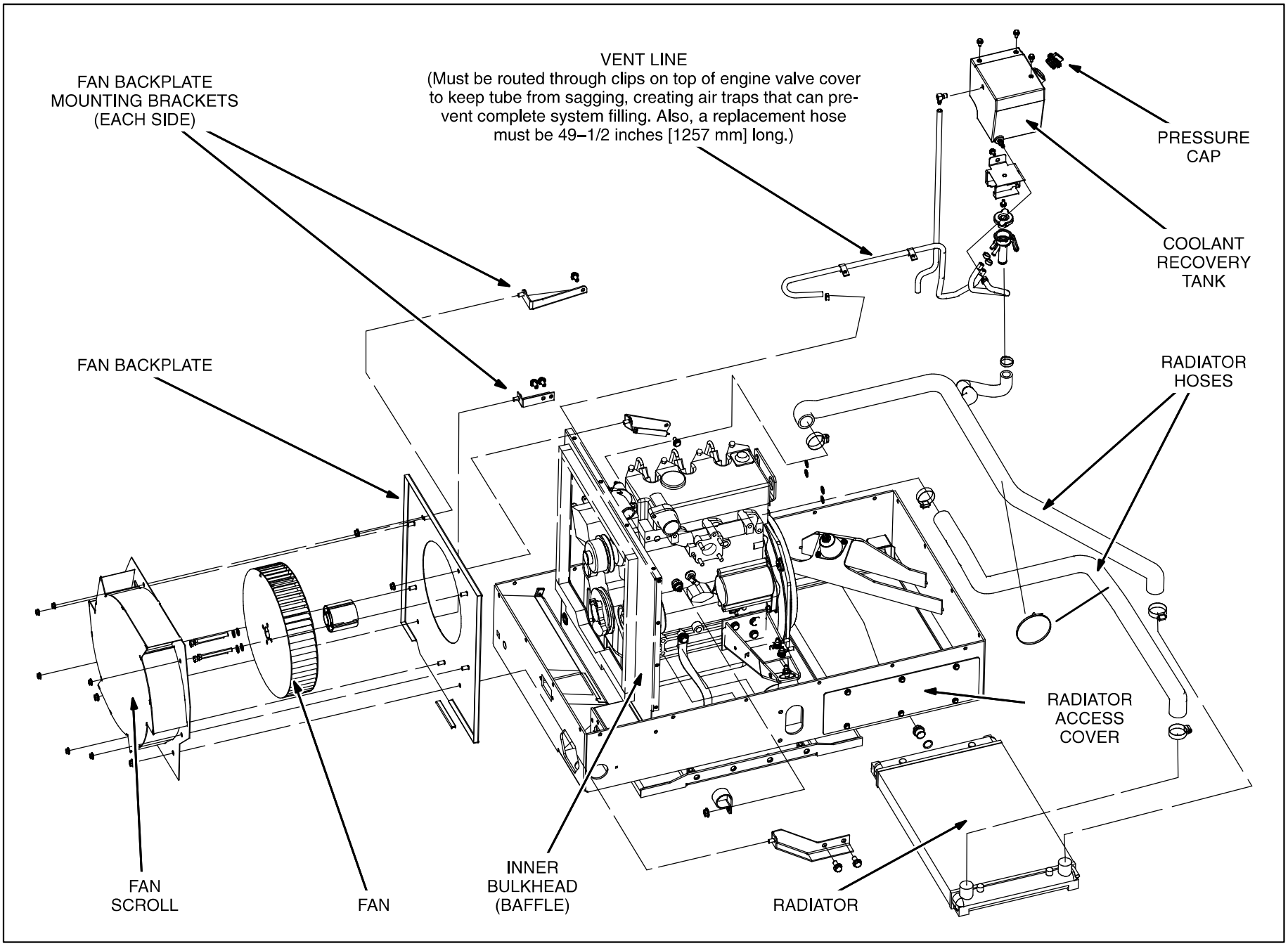


**FIGURE 8-1. ENGINE COOLING SYSTEM (BEGINNING SPEC C)**

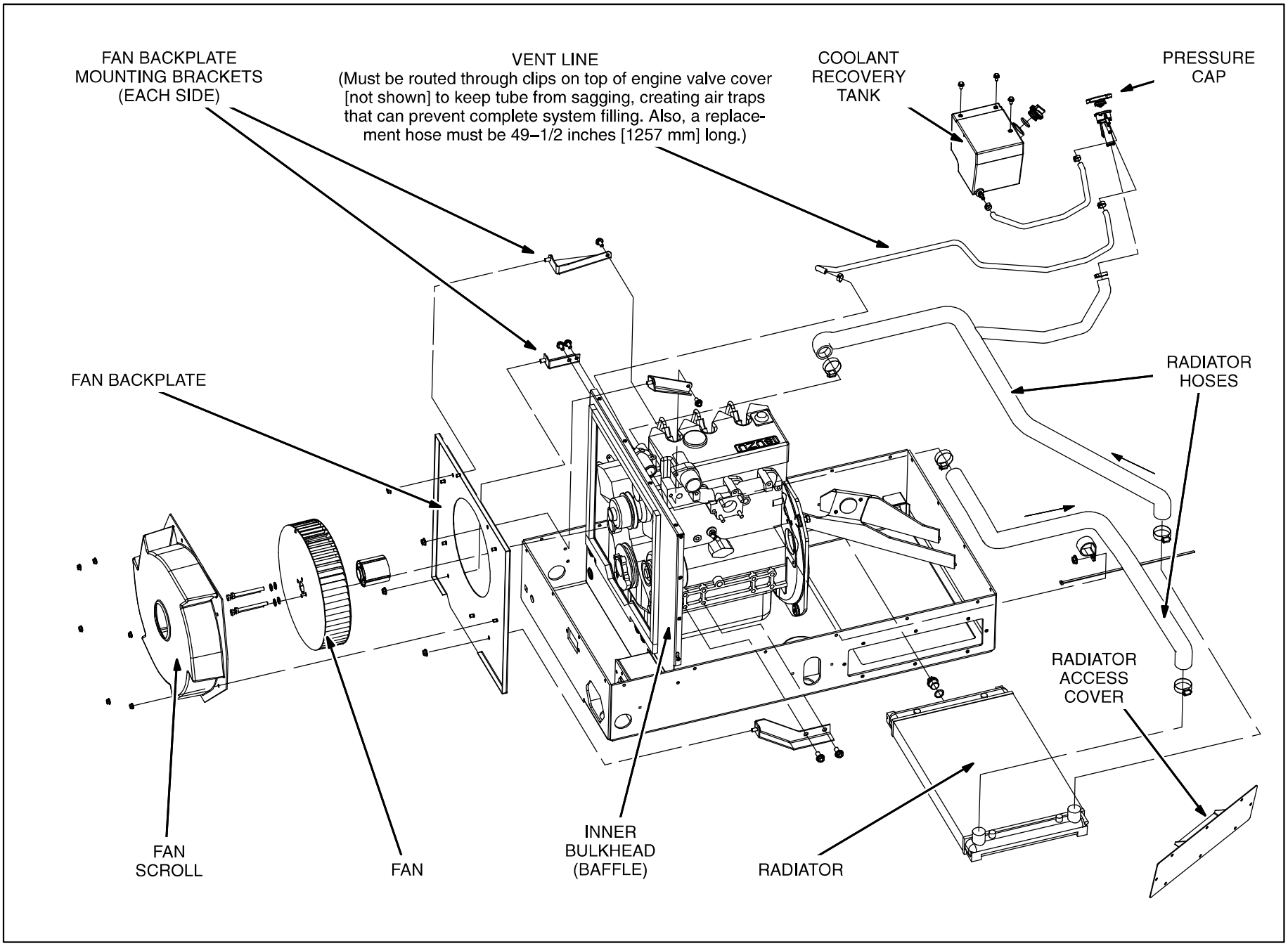


**FIGURE 8-2. ENGINE COOLING SYSTEM (PRIOR TO SPEC C)**

THIS PAGE IS INTENDED TO BE BLANK

# 9. Engine and Accessories

**⚠WARNING** ***Accidental or remote starting can cause severe personal injury or death. Before removing a housing panel or access door, disconnect the negative (–) cable at the battery to prevent the engine from starting.***

## ENGINE

See Engine Workshop Manual 981-0525 for servicing the engine proper: adjusting valve clearance (lash), servicing the fuel injection system, replacing the glow plugs, cleaning the crankcase breather assembly, replacing the coolant thermostat and pump and overhauling the engine.

### Removal

The engine-generator assembly and wiring harnesses should be removed as an assembly from the genset if it is necessary to remove either the engine (Figure 9-1) or the generator (Figure 10-1 or 10-2). To do so:

1. Remove all of the housing panels except the inner bulkhead (p. 4-4), leaving the wiring harnesses attached to the engine-generator assembly.
2. Drain the cooling system, disconnect the radiator and vent hoses from the engine and remove the blower (fan) assembly (p. 8-1).
3. Remove the radiator (p. 8-1) for access to the bolt head of the generator isolation mount.
4. Disconnect the generator cooling air tube from the generator (p. 6-1 or 6-2).
5. Disconnect the battery cables and base grounding strap from the engine (on starter side).
6. Disconnect the wiring harness lead to the fuel pump.
7. Disconnect the supply and return fuel hoses at the engine (p. 5-2).
8. Disconnect the flexible connector from the muffler outlet flange (p. 7-2).
9. Attach a hoist of sufficient capacity to the lifting eye, take up the slack and remove the center bolts of the three isolation mounts. Lift the engine-generator assembly away.

### Installation

Installation is the reverse of removal. Make sure the air seal ring is in place around the oil drain hole in the base to keep air from bypassing the radiator. (The engine-generator compartment is under a partial vacuum.) Tighten all screws to specifications (p. 15-1).

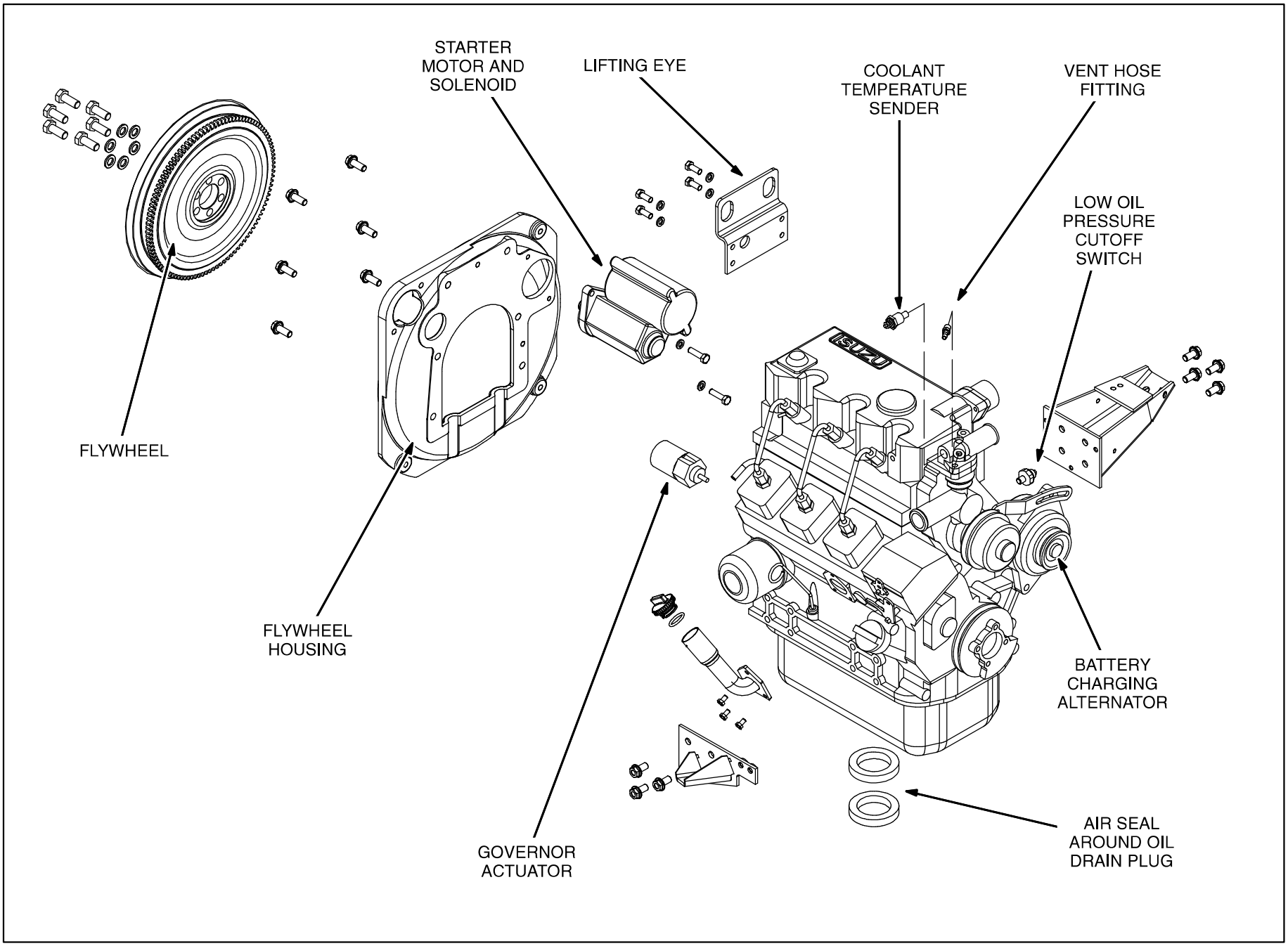


**FIGURE 9-1. ENGINE AND ACCESSORIES**

**⚠WARNING** ***Accidental or remote starting can cause severe personal injury or death. Before removing a housing panel or access door, disconnect the negative (–) cable at the battery to prevent the engine from starting.***

## ENGINE SENSORS

The engine is equipped with a coolant temperature sender and low oil pressure cutout switch (Figure 9-1). The associated fault codes (*Section 12. Troubleshooting*) are as follows:

- **No. 1** - Engine Over Temperature
- **No. 2** - Low Oil Pressure
- **No. 23** - Faulty Low Oil Pressure Cutout Switch
- **No. 24** - Faulty Engine Temperature Sender

### Coolant Temperature Sender

The sender is accessible through the front access opening. Replace the sender if resistance is not approximately 1300 ohms in ice water, 700 ohms at room temperature or 57 ohms in boiling water. Use thread sealant and engage at least two threads when reassembling.

### Oil Pressure Switch

The switch is accessible through the top access opening with the manifold air hose disconnected and moved out of the way. Replace the switch if it is not closed (ground continuity at the terminal) when the engine is not running or if the switch does not open when oil pressure rises to 14 psi (96 kPa).

## BATTERY CHARGING ALTERNATOR

The battery charging alternator (Figure 9-1) is removeable after the fan assembly and backplate are removed (p. 8-2 or 8-3). Adjust fan belt tension and tighten the mounting bolts according specifications (p. 15-1) when reassembling.

## STARTER MOTOR

The starter motor (Figure 9-1) is removeable through the top access opening. Tighten the mounting bolts according specifications (p. 15-1) when reassembling.

## GLOW PLUGS

Refer to engine Workshop Manual 981-0525 when replacing the glow plugs, which are accessible through the top access opening.

**Note: If a glow plug does not come out after unscrewing it, or the end has broken off, it will be necessary to remove the engine head. Glow plugs can swell if preheat voltage is greater than 14 volts, such as when a battery booster is used for starting.**

**⚠WARNING** ***Accidental or remote starting can cause severe personal injury or death. Before removing a housing panel or access door, disconnect the negative (–) cable at the battery to prevent the engine from starting.***

## GOVERNOR ACTUATOR

The governor actuator (Figure 9-1) is removeable through the front access opening. Disconnect the actuator and unscrew it from the engine block. When reassembling, use Loctite 587 "ultra-blue" sealant or equivalent on the seat. ***Do not apply the sealant to the threads***. Replace the actuator if:

- Electrical resistance across its terminals is not 2.8 to 2.9 ohms.
- The plunger does not pull in when **B+** (12 VDC) is applied across its leads.
- The plunger does not move in and out smoothly when pushed in by hand.

## HIGH-IDLE SPEED

Reset high-idle speed if the stop screw seal has been broken or internal governor parts have been replaced or are worn. To reset high-idle speed:

1. Remove the top housing panel (p. 4-4) for access to the stop screw (Figure 9-2).
2. Remove the governor actuator to allow operation at full fuel rack, but leave it connected to keep Fault No. 19 from preventing Start. Plug the opening to keep oil from splashing out.
3. Disconnect the fuel pump and power it directly with a 12 volt battery to keep the engine running when Fault No. 12 or 14 occurs.
4. *Disconnect all loads from the genset to protect them from overfrequency* and start the genset. Adjust the stop screw to obtain 67.3-68.3 Hertz (2019-2049 rpm). TO STOP THE ENGINE, disconnect the fuel pump from the battery.

   **⚠CAUTION** ***With the housing top off the engine could overheat if run longer than 5 minutes or so. Let is cool down, if necessary, before continuing the test.***

5. Check speed with the top panel and access cover on. Frequency should rise slightly to 68-69 Hertz (2040-2070 rpm). Repeat if necessary and seal the adjusting threads with paint.
6. Re-install the actuator, reconnect the fuel pump and secure the housing top and access cover.

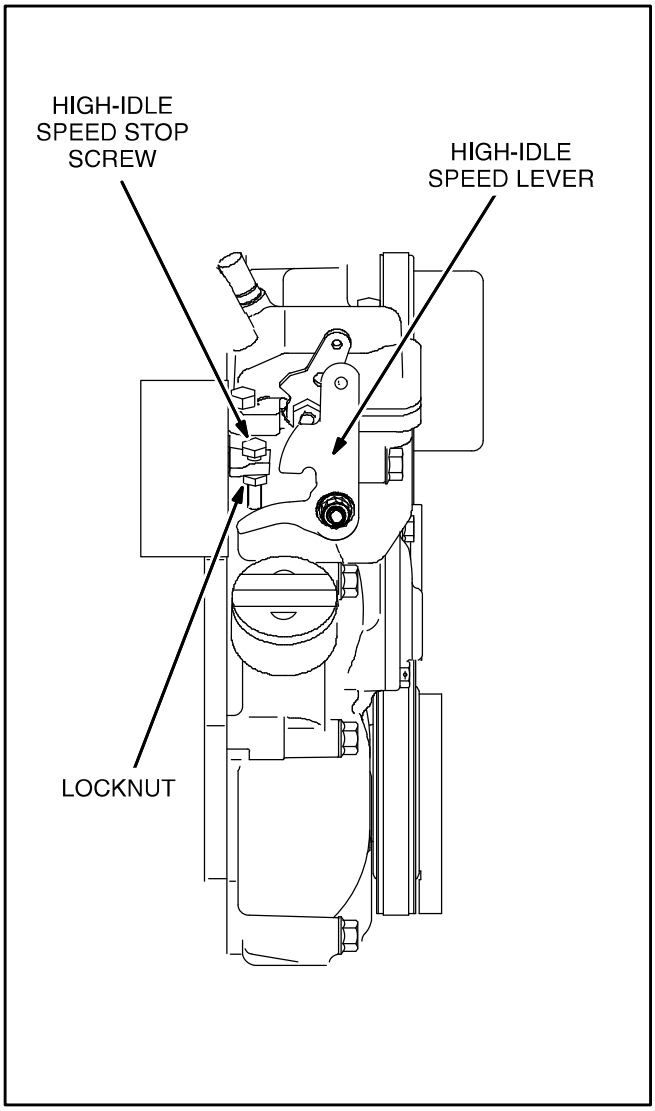


**FIGURE 9-2. HIGH-IDLE SPEED STOP SCREW**

# 10. Generator

**⚠WARNING** ***Accidental or remote starting can cause severe personal injury or death. Before removing a housing panel or access door, disconnect the negative (–) cable at the battery to prevent the engine from starting.***

## GENERATOR WINDING TESTS

### Testing Winding Insulation Resistance

***Testing for Winding-to-Winding and Winding-to-Ground Shorts:*** A digital ohmmeter can be used (highest scale) as a preliminary check for a grounded Stator, Quadrature or Field Winding or for a short between Stator (Main) and Quadrature windings. The meter should indicate infinite resistance.

*A 500 VDC megger is recommended for finding winding-to-winding or winding-to-ground shorts. Resistance between windings or to ground should be not be less than 1 megohm.*

***Testing Stator Windings with a Megger:*** A 500 VDC megger is recommended for testing Stator Winding insulation resistance. Disconnect **T2** and **T3** from the grounding screw on the engine mounting bracket (p. A-3) to isolate the windings from ground, and separate the two parts of generator connector **P3/J3** to isolate the control board from the DC test voltage. Apply one side of the DC test voltage to both windings (connect to either end) and the other side to a good generator ground (stator laminations) for 10 minutes and record resistance values at one minute and at 10 minutes.

A resistance value of at least 5 megohms should be obtained for a new stator with dry windings. The polarization index (the ratio of the resistance reading at 10 minutes to the reading at one minute) should also be at least 2. For a genset that has been in service, the resistance value should not be less than 1 megohm, nor the polarization index less than 2.

If the readings are low, or the genset has been in storage for a long time in a high-humidity environment, the test should be repeated after the windings have been dried. The most effective way of drying the stator windings, if the genset is operable, is to run it under full load for at least one hour.

### Testing Winding Resistance

Use a ***Digital Ohmmeter*** to check for open or shorted Main (Stator), Quadrature or Field Windings. Use a ***Wheatstone Bridge*** having a precision of at least 0.001 ohm to measure Stator Winding resistance.

Replace a rotor or stator that has winding resistances outside Table 10-1 tolerances.

***Stator Windings:*** Check Stator Winding resistance across the AC output terminal block: **TB2-1—TB2-3** and **TB2-2—TB2-3**. Make sure circuit breaker **CB1/CB2** is ON.

If resistance is within Table 10-1 tolerances, the whole AC output circuit is probably sound.

If resistance is high, check resistance directly across the winding leads, which are connected at **CB1/CB2** and at the grounding screw on the engine mounting bracket (p. A-3). Service as necessary by tightening connections or servicing the generator, AC harness (p. A-3) or circuit breakers (p. 11-6).

***Field and Quadrature Windings:*** Separate the two parts of generator connector **P3/J3** for access to the field windings (**P3-7—P3-8**) and quadrature windings (**P3-3—P3-6**). Resistance must within Table 10-1 tolerances. If field resistance is high, first service the brushes and slip rings (p. 10-4) and repeat the test. Then, if necessary, service the rotor.

**TABLE 10-1. WINDING RESISTANCES**

| WINDING | RESISTANCE (OHMS) @ 70° F (21° C) | | |
|---|---|---|---|
| | Beginning Spec C | | Prior to Spec C |
| | HDCAA HDCAC | HDCAB HDCAD | All Models |
| T1-T2, T3-T4 | 0.197-0.241 | 0.178-0.218 | 0.197-0.241 |
| Q1-Q60 (P3-3 to P3-6) | 1.99-2.42 | 1.89-2.31 | 1.99-2.42 |
| Rotor (P3-7 to P3-8) | 19.4 | 22.5 | 19.4 |
| Note: Even though winding resistance may be within the tolerances of this Table, replace the Rotor or Stator if winding-to-winding or winding-to-ground resistance (winding ***insulation*** resistance) is less than 1 megohm. (An ohmmeter must indicate an *open circuit* or *infinite resistance* between windings or between any winding and ground.) | | | |